| | | | |
|---|---|---|---|
| 2D Drawing | IGES | STEP | 3D PDF |
| Solder Profile | CofC RoHS Compliant | CofC REACH Compliant | UL Plastic File |
| Certificate of Origin | Check Stock | Request a Sample | Send Us An Email |

Generated Part Number

**KCDX-5S-N**

Part Number Builder

| KCDX | – | 5 | S | N |
|---|---|---|---|---|
| Series | | Number of Contacts | Contact Type | Option |

**Series**
KCDX - Circular DIN Connectors,
Right Angle PCB Mount, Receptacle

**Number of Contacts**
5 Contacts

**Contact Type**
S - Receptacle

**Option**
N - Non-Shielded, 10mm Pitch
N2 - Non-Shielded, 5mm Pitch
S - Shielded, 10mm Pitch
S2 - Shielded, 5mm Pitch

Contact Kycon for Other Options

LR78160 E140125

## MINI/CIRCULAR DINs: KCDX Series
## Circular Din Panel Mount

### Product Features
Audio, Video, Computer and Digital Equipment Applications
Designed to Meet European DIN Standards
Nickel Shells for Good Conductivity, Grounding and EMI/RFI Shielding
Available in Reflow Compatible Design
Visual and Mechanical Polarization for Plug Insertion
Various Circuit Sizes
CSA/NRTL Certified File No. LR78160
UL File No. E140125

### Performance Specifications
**Materials and Finish**
**Body**
PBT Thermoplastic, Black Color, UL 94V-0 Rated
**Contact**
Bronze, Matte Tin Plated
**Shield**
Phosphor Bronze, Nickel Plated

### Electrical Characteristics
**Rated Current**
2A
**Rated Voltage**
24V DC
**Insulation Resistance**
100 Megohm Min. at 500V DC
**Contact Resistance**
**Pin to Contact Resistance**
60 milliohms Max.
**Plug Shield to Socket Resistance**
100 milliohms Max.
**Dielectric Withstanding Voltage**
500V AC for 1 Minute
**Operating Temperature**
-25°C to + 85°C
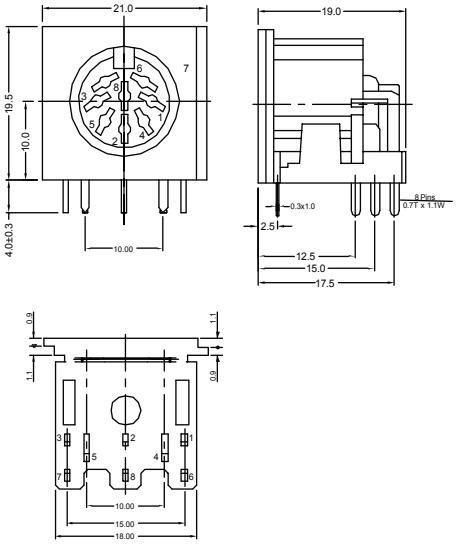
**KCDX**
Dimensions in mm