38259

	ASSEMBLY MATERIAL NO.	NUMBER OF CIRCUITS "XX"	DIM. "A"		DIM. "B"		DIM. "C"		BARRIER MATERIAL NO.
©	382590008	02	41.3	1.62	11.11	.438	33.34	1.313	382580002
©	382590018	03	52.4	2.06	22.23	.875	44.45	1.750	382580003
	382590031	04	63.5	2.50	33.34	1.313	55.56	2.188	382580004
	382590044	05	74.6	2.94	44.45	1.750	66.68	2.625	382580005
©	382590053	06	85.7	3.37	55.56	2.188	77.79	3.063	382580006
©	382590071	08	107.9	4.25	77.79	3.063	100.01	3.938	382580008
©	382590082	12	152.4	6.00	122.24	4.813	144.46	5.688	382580012
©	382590089	20	241.3	9.50	211.14	8.313	233.36	9.188	382580020

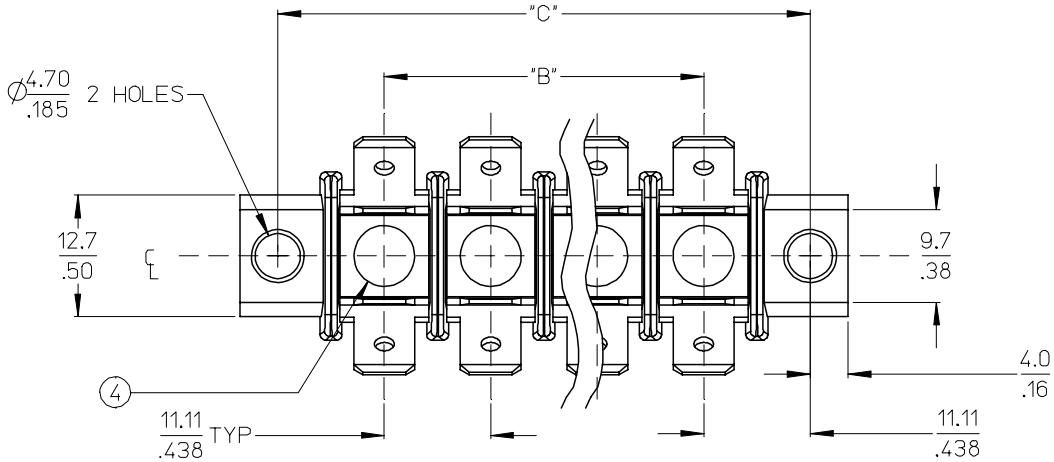

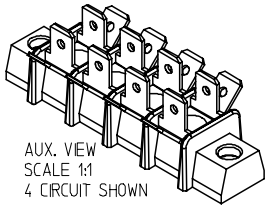

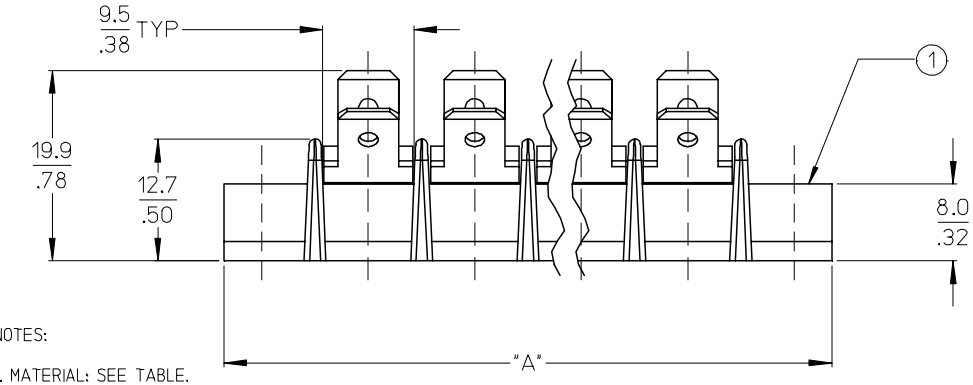

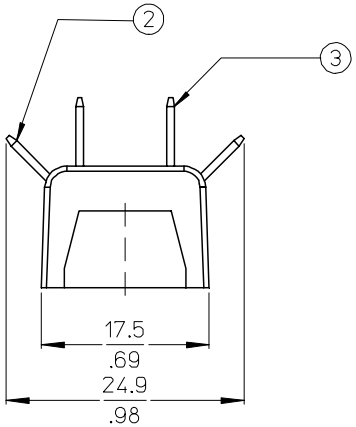

NOTES:

1. MATERIAL: SEE TABLE.
2. FINISHES: SEE TABLE.
3. PRODUCT SPECIFICATION: NOT REQUIRED.
4. PACKAGING: NOT REQUIRED.
5. "XX" REFERS TO THE QUANTITY OF CIRCUITS.
6. ROHS COMPLIANT.

ITEM	QTY.	DESCRIPTION	MATERIAL	FINISH
4	XX	RIVET SEMI-TUBE SN/B .203 LONG	BRASS	TIN PLATED
3	XX	.250 DBL TAB 1 HOLE 90/90 VERTICAL TIN	BRASS	TIN PLATED
2	XX	.250 DBL TAB 1 HOLE 45/45 SLANT TIN	BRASS	TIN PLATED
1	1	BARRIER TERMINAL STRIP	PHENOLIC	BLACK

ADD P/N 382590053
EC NO: ETC2008-0073
DRWN: JENCINAS 2007/10/17
CH'KD: JENCINAS 2007/11/05
APPR: JMACNEIL 2007/11/05
DESCRIPTION
REV

QUALITY SYMBOLS
▼=0
▽=0

GENERAL TOLERANCES (UNLESS SPECIFIED)

	mm	INCH
4 PLACES	± ---	± ---
3 PLACES	± ---	± .005
2 PLACES	± 0.13	± .01
1 PLACE	± 0.3	± ---
ANGULAR ± 2 °		

DRAFT WHERE APPLICABLE MUST REMAIN WITHIN DIMENSIONS

DIMENSION STYLE: MM/IN
SCALE: 2:1
DESIGN UNITS: INCH
THIRD ANGLE PROJECTION

DRAWN BY: C. YORK DATE: 2004/02/25
CHECKED BY: R. KEMP DATE: 2004/02/25
APPROVED BY: G. ROBERTSON DATE: 2004/02/26

TITLE: 11.11MM/.438 SR BTS FT RIVETED QUICK CONN. ASSY

MOLEX INCORPORATED

MATERIAL NO.: SEE CHART
DOCUMENT NO.: SD-38259-001
SHEET NO.: 1 OF 1
SIZE: B

THIS DRAWING CONTAINS INFORMATION THAT IS PROPRIETARY TO MOLEX INCORPORATED AND SHOULD NOT BE USED WITHOUT WRITTEN PERMISSION

tb_frame_B_P_ME_T
Rev. E 2006/04/15