Battery Disconnect Switch

Series 15968

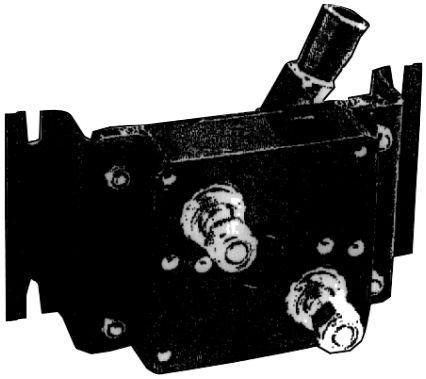

SPECIFICATIONS

Ratings: 50 VAC or VDC max; 400A continuous. Vehicle cranking and max. surge currents to 2000A (based on 20% duty cycle with ON times of 5 seconds max.).
Operating Temperature: 300°F (150°C) max.
Storage Temperature: –40°F (–40°C) to 150°F (65°C).
Applications: A non-fused current interrupt disconnect designed for opening the circuit between a battery and the complete electrical load of a battery powered system.
Options: Without mounting brackets — order Part No. 13969. For sealed version and other special options, consult factory.

Dimensions:

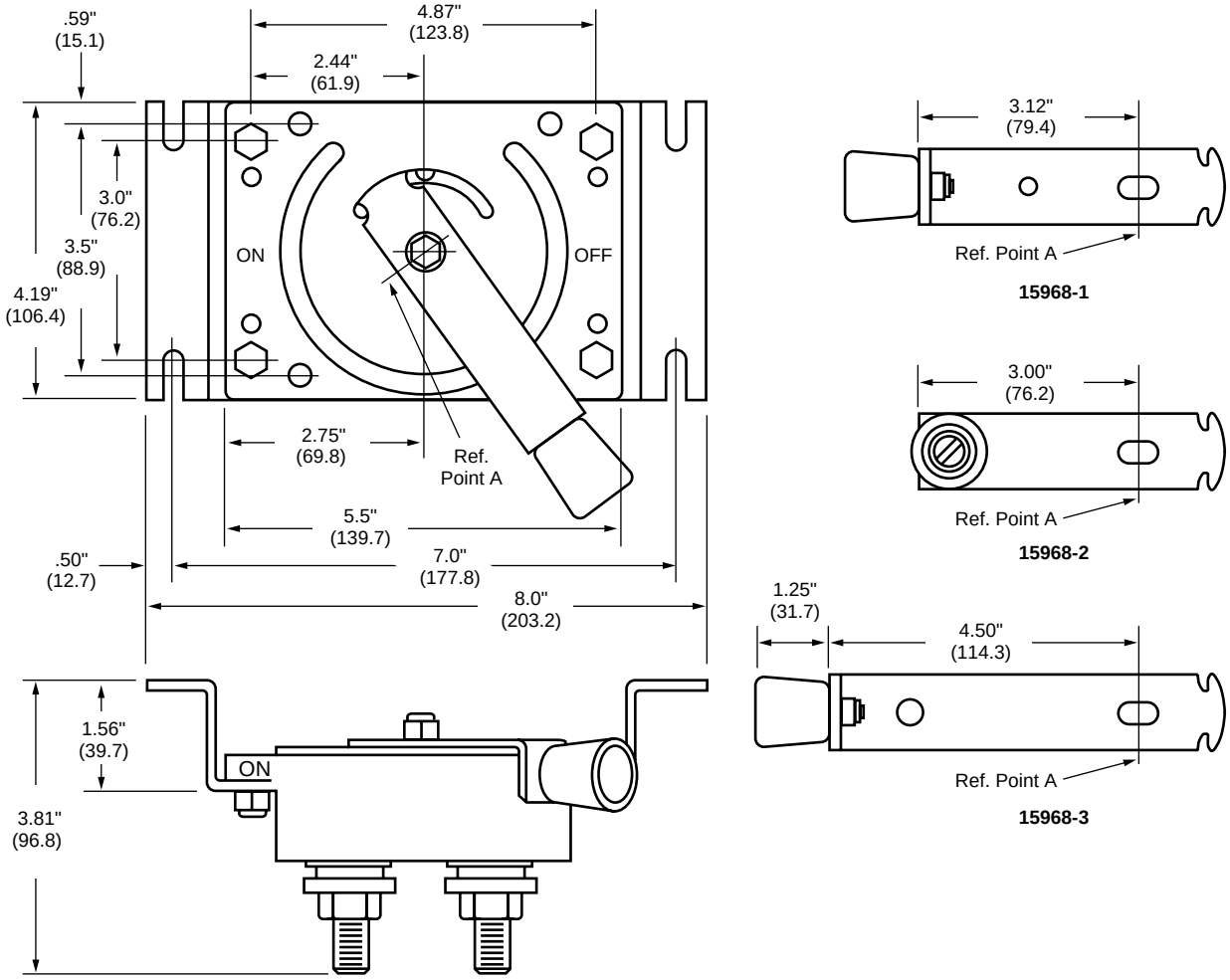

The only controlled copy of this BIF document is the electronic read-only version located on the Bussmann Network Drive. All other copies of this BIF document are by definition uncontrolled. This bulletin is intended to clearly present comprehensive product data and provide technical information that will help the end user with design applications. Bussmann reserves the right, without notice, to change design or construction of any products and to discontinue or limit distribution of any products. Bussmann also reserves the right to change or update, without notice, any technical information contained in this bulletin. Once a product has been selected, it should be tested by the user in all possible applications.