PART NAME	NEMA 4X DIE CAST ALUMINUM ENCLOSURE	PART No.	AN-1317 AN-1317-G	REVISION DATE	2-10-14

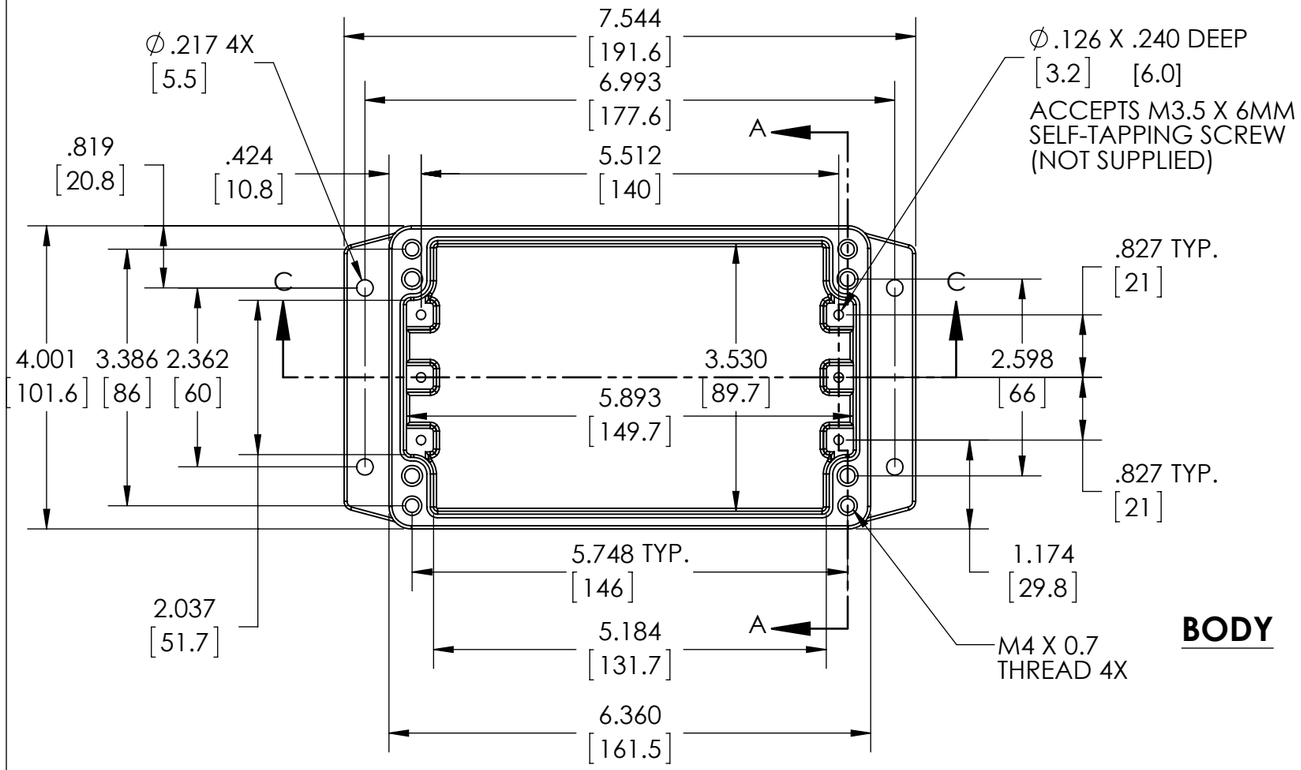

BODY

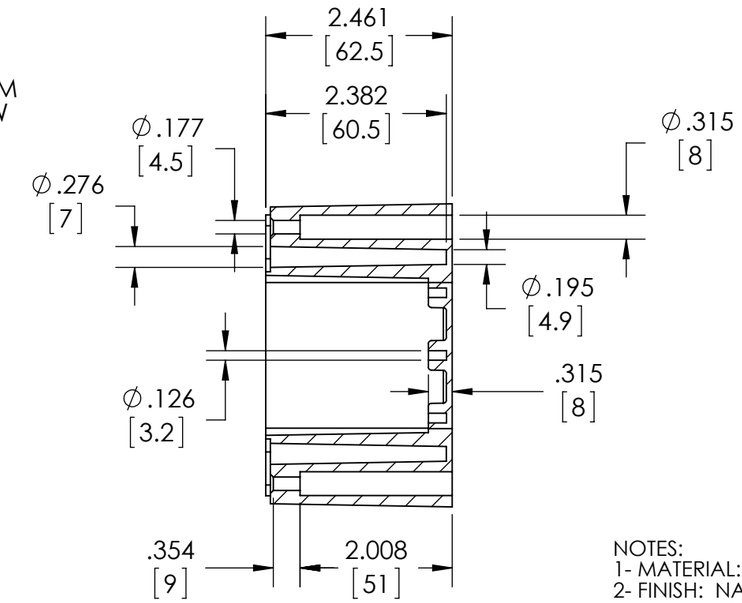

SECTION A-A

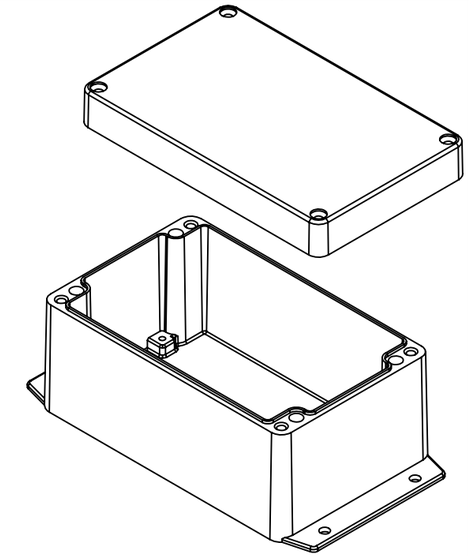

NOTES:
1- MATERIAL: ALUMINUM ALLOY ADC-12
2- FINISH: NATURAL (NO SUFFIX)
GRAY (SUFFIX -G)
3- FOUR (4) M4 X 0.7mm SCREWS SUPPLIED FOR ASSEMBLY OF COVER TO BODY
4- ALL HOLE DIAMETERS HAVE ±.005[.12] TOLERANCE.
ALL OTHER DIMENSIONS HAVE ±.015[.38] TOLERANCE.
5- ALL OUTSIDE DRAFT ANGLE: 1°
ALL INSIDE DRAFT ANGLE: 1/2°
6- DIMENSIONS ARE INCH[MM]

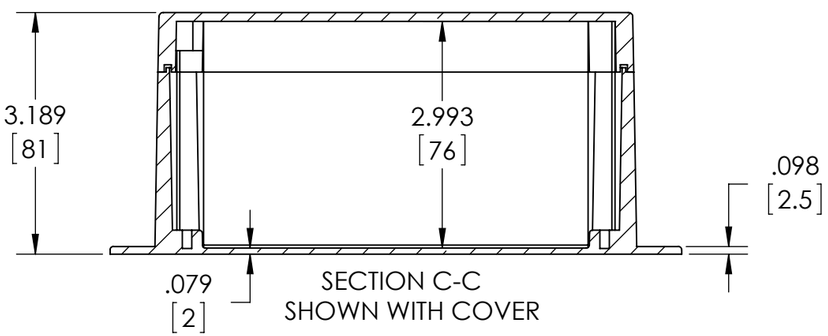

SECTION C-C
SHOWN WITH COVER

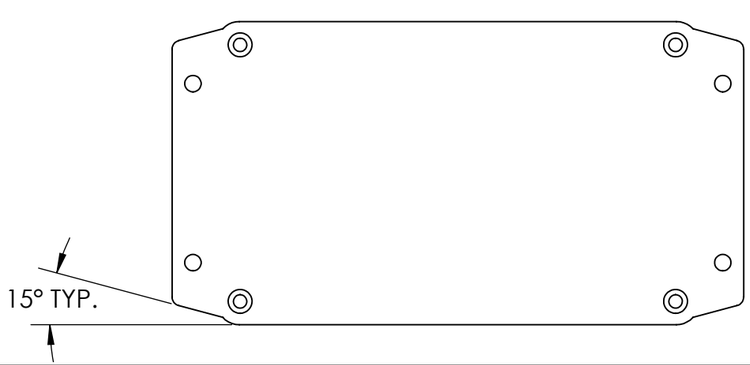
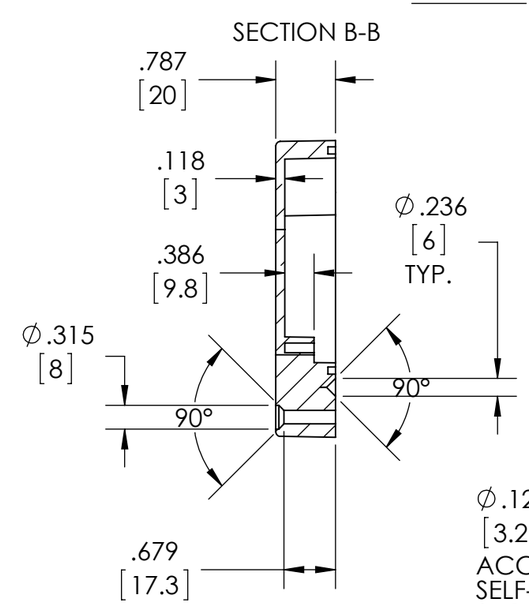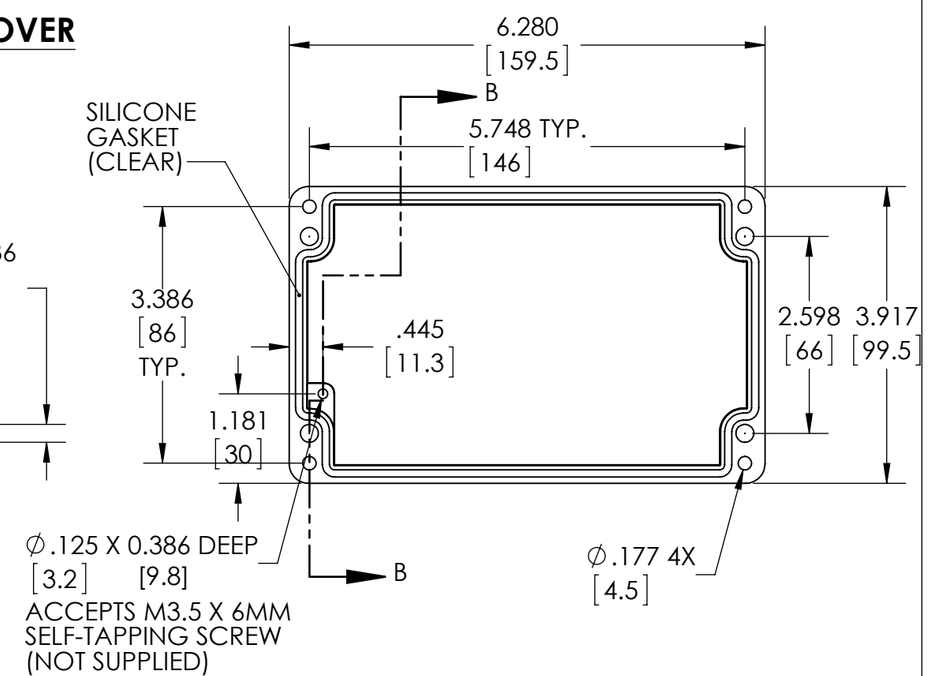
COVER