SD-83101-9000

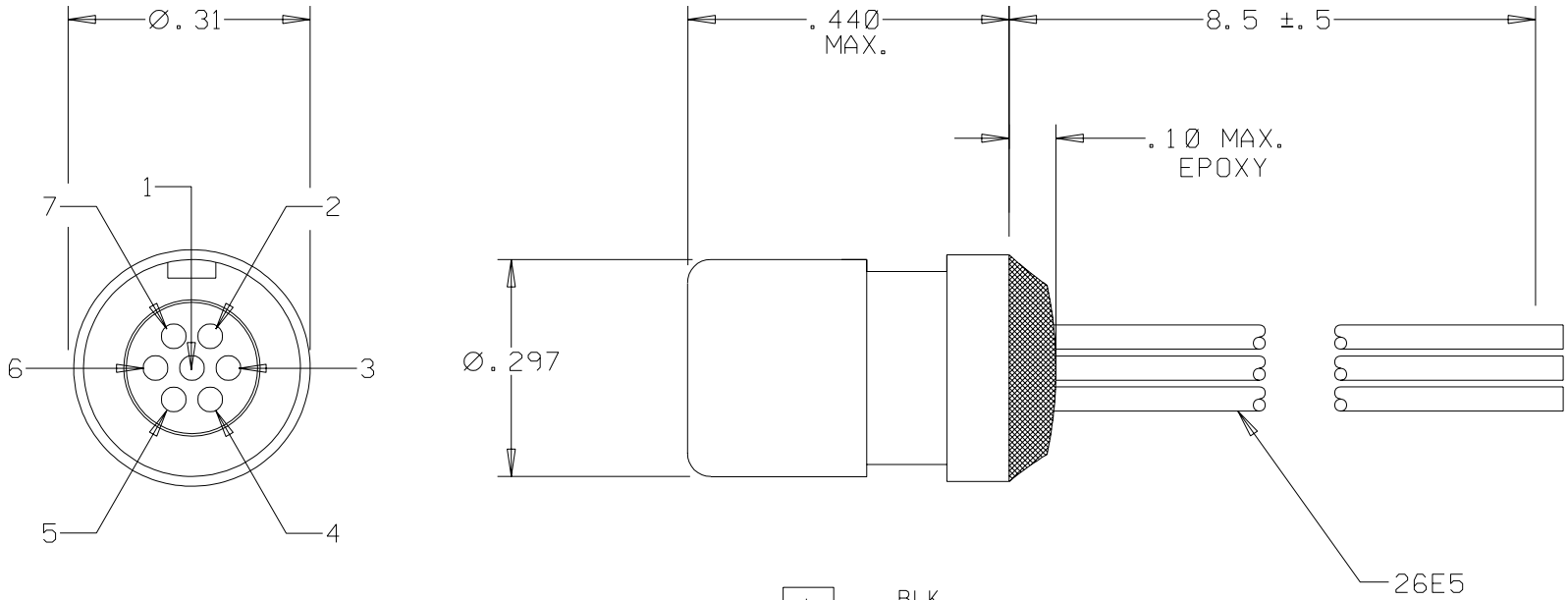

1	BLK
2	BRN
3	RED
4	ORG
5	YEL
6	GRN
7	BLU

1. MARKING: NONE.

NOTES: UNLESS OTHERWISE SPECIFIED.

LTR.	REVISIONS	LTR.	REVISIONS
		A	UM7-0423

DIMENSIONS SHOWN (METRIC) INCH

UNLESS OTHERWISE SPECIFIED
TOLERANCES: ANGULAR ± 1/2°

	INCH	METRIC
3 PLACE	± .005	
2 PLACE	± .010	± ——
1 PLACE		± ——

DRAFT WHERE APPLICABLE MUST REMAIN WITHIN DIMENSIONS

DRWG. BY D.URBACH | CHK'D. BY
APP'D. BY | SCALE 4 : 1

REVISE ONLY ON CAD SYSTEM

TITLE CIRCULAR CONNECTOR, PLUG, W/'O'-RING, SIZE 1-7, SPECIAL

MATERIAL

Ulti Mate molex industrial interfaces

SHEET NO. 1 OF 1 | DATE 23APRIL97

PART NO. 83101-9000 | DRWG. NO. SD-83101-9000

FILE NAME 31019000.S99

THIS DRAWING CONTAINS INFORMATION THAT IS PROPRIETARY TO MOLEX INC. AND SHOULD NOT BE USED WITHOUT WRITTEN PERMISSION.

SIZE A