THIS DRAWING IS UNPUBLISHED. RELEASED FOR PUBLICATION AUG ,2006.
© COPYRIGHT 2009 BY TYCO ELECTRONICS CORPORATION. ALL RIGHTS RESERVED.

LOC	DIST
DW	—

REVISIONS

P	LTR	DESCRIPTION	DATE	DWN	APVD
	D	REVISED. (ECR-12-002363)	31JUL12	JC	WK

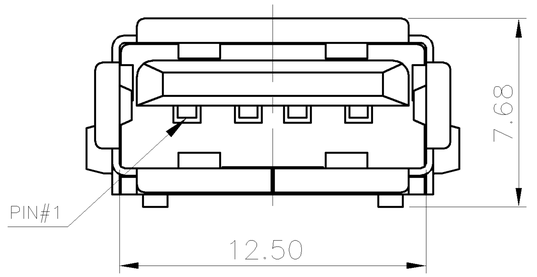

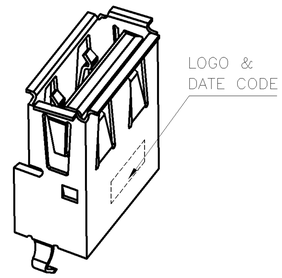

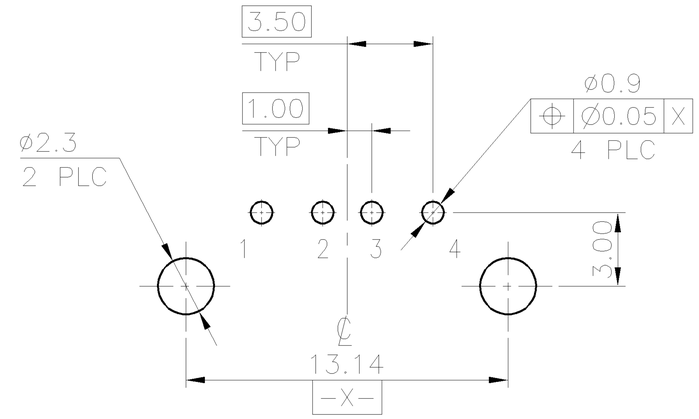

RECOMMEND P.C.B LAYOUT (THICKNESS=1.6mm)
(COMPONENT SIDE) TOLERANCE±0.05

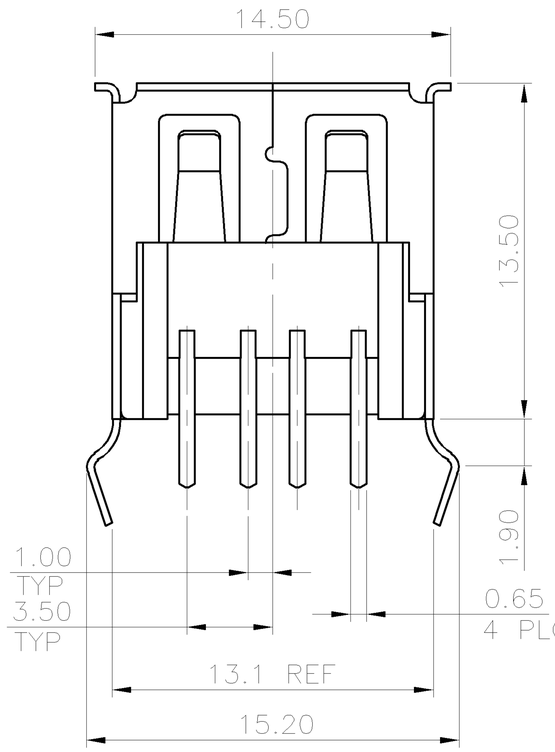

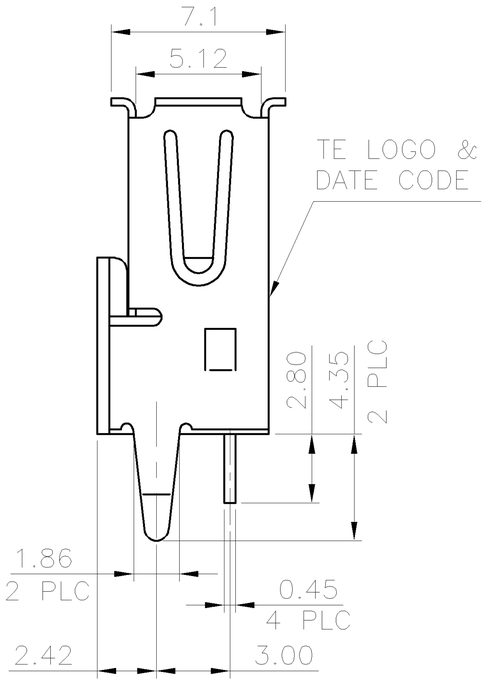

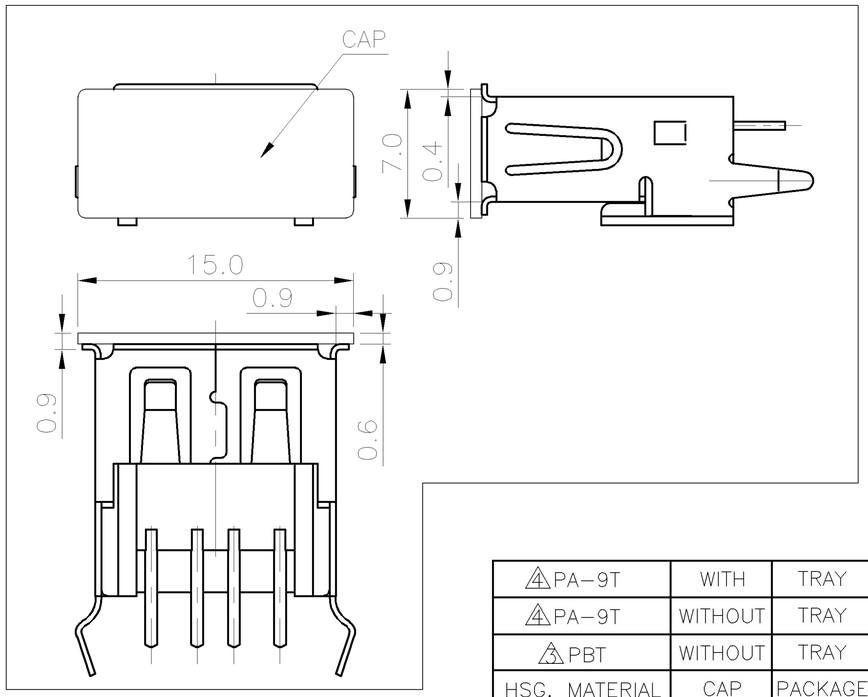

4 PA-9T	WITH	TRAY	1734085-3
4 PA-9T	WITHOUT	TRAY	1734085-2
3 PBT	WITHOUT	TRAY	1734085-1
HSG. MATERIAL	CAP	PACKAGE	PART NUMBER

NOTES:
1. MATERIAL:
   HOUSING: THERMOPLASTIC (SEE TABLE), WITH 30% GF.
   UL 94V-0 RATED, BLACK COLOR.
   CAP: THERMOPLASTIC HIGH TEMP WITH 30%GF, UL 94V-0, WHITE COLOR.
   CONTACT: PHOSPHOR BRONZE.
   SHIELD: BRASS.
2. FINISH :
   CONTACT: 0.762μm [30μ"] MIN. GOLD PLATING ON CONTACT AREA.
   3.048μm [120μ"] MIN. MATTE-TIN PLATING ON SOLDERTAILS.
   WITH ENTIRE CONTACT UNDERPLATED 1.27μm [50μ"] MIN. NICKEL
   SHIELD: 0.762μm [30μ"] MIN. NICKEL PLATING WITH
   0.762μm [30μ"] MIN. Cu UNDERPLATING OVERALL
3. WAVE SOLDER CAPABLE TO 240°C PER TE TEST SPEC. 109-202, CONDITION A.
4. REFLOW SOLDER CAPABLE TO 260°C PER TE TEST SPEC. 109-201, CONDITION B.
5. TID NUMBER IS 61000806 FOR USB 2.0 SPEC.

THIS DRAWING IS A CONTROLLED DOCUMENT.

DIMENSIONS: MM

TOLERANCES UNLESS OTHERWISE SPECIFIED:

0 PLC	± –
1 PLC	± 0.35
2 PLC	± 0.25
3 PLC	± 0.15
4 PLC	± –
ANGLES	± 3°

MATERIAL: SEE NOTE

FINISH: SEE NOTE

DWN	O. HU 18MAR2005
CHK	S. HOU 18MAR2005
APVD	W.J. KE 18MAR2005
PRODUCT SPEC	108-57549
APPLICATION SPEC	501-57638
WEIGHT	1.70 GRAMS

TE Connectivity

NAME: USB CONNECTOR, A SERIES, VERTICAL, DIP TYPE

SIZE	CAGE CODE	DRAWING NO	RESTRICTED TO
A3	00779	C-1734085	—

CUSTOMER DRAWING | SCALE — | SHEET 1 OF 9 | REV D

OBSOLETE
NOT the LATEST REVISION

THIS DRAWING IS UNPUBLISHED. RELEASED FOR PUBLICATION AUG ,2006.
© COPYRIGHT 2009 BY TYCO ELECTRONICS CORPORATION. ALL RIGHTS RESERVED.

LOC	DIST
DW	—

REVISIONS

P	LTR	DESCRIPTION	DATE	DWN	APVD
		SEE SHEET 1.			

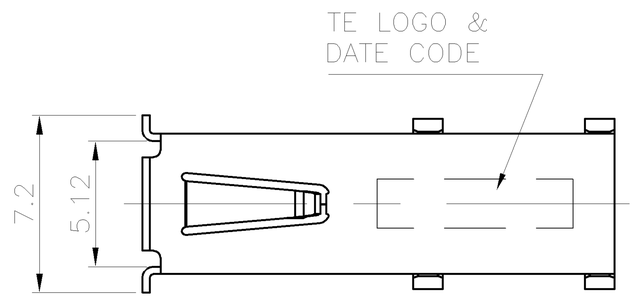

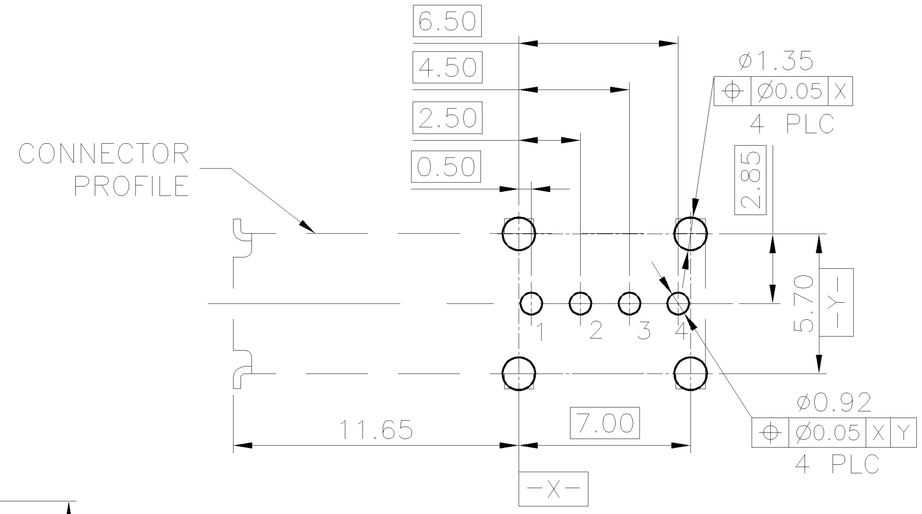

RECOMMEND P.C.B LAYOUT (THICKNESS 1.6mm)
(COMPONENT SIDE) TOLERANCE±0.05

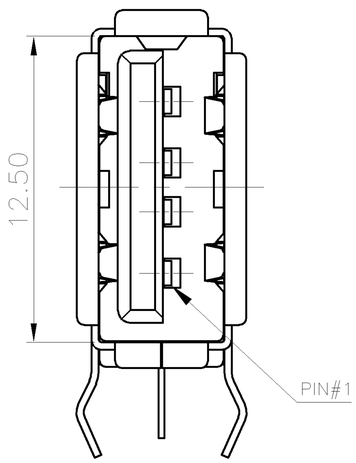

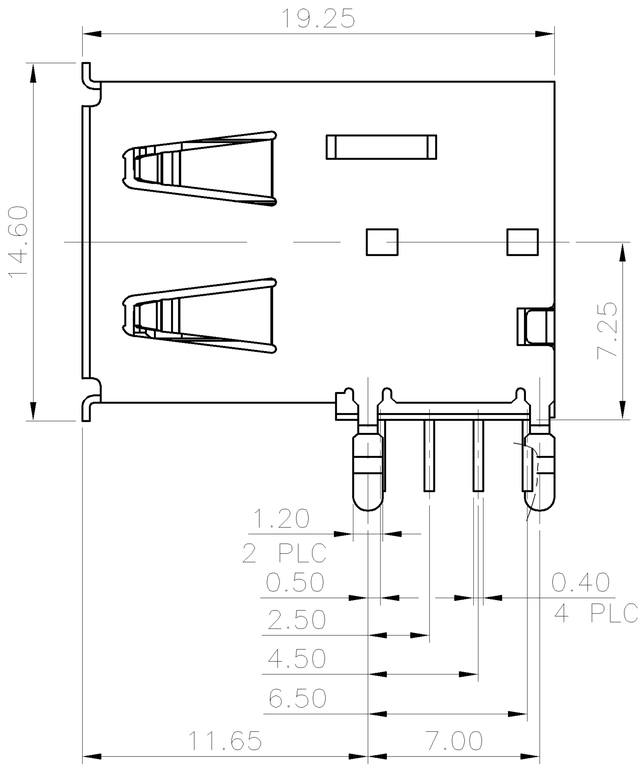

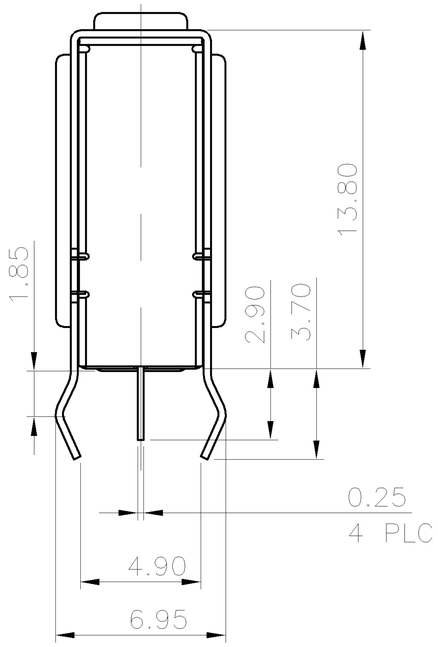

NOTES :
1. MATERIAL:
   HOUSING: THERMOPLASTIC (SEE TABLE), WITH 30% GF. UL94V-0 RATED, BLACK COLOR
   CONTACTS: PHOSPHOR BRONZE.
   SHIELD: BRASS.
   REAR SHIELD: SPCC.
2. FINISH:
   CONTACT: 0.762μm [30μ"] MIN. GOLD PLATING ON CONTACT AREA
   3.048μm [120μ"] MIN. BRIGHT TIN PLATING ON SOLDERTAILS WITH ENTIRE CONTACT UNDERPLATED 1.27μm [50μ"] MIN. NICKEL.
   SHIELD: 0.762μm [30μ"] MIN. NICKEL PLATING WITH 0.762μm [30μ"] MIN. Cu UNDERPLATING OVERALL
3. WAVE SOLDER CAPABLE TO 240°C PER TE TEST SPEC. 109-202, CONDITION A.
4. REFLOW SOLDER CAPABLE TO 260°C PER TE TEST SPEC. 109-201, CONDITION B.
5. TID NUMBER IS 61000806 FOR USB 2.0 SPEC.
6. LOW HALOGEN SPECIFICATION:
   CHLORINE(Cl): 900ppm MAX.
   BROMINE(Br): 900ppm MAX.

	HSG. MATERIAL	PACKAGE	PART NUMBER
	6 4 LCP	TRAY	1-1734085-3
	4 PA-9T	TRAY	1-1734085-2
OBSOLETED	3 PBT	TRAY	1-1734085-1

THIS DRAWING IS A CONTROLLED DOCUMENT.

DIMENSIONS: MM

TOLERANCES UNLESS OTHERWISE SPECIFIED:

0 PLC	± –
1 PLC	± 0.35
2 PLC	± 0.25
3 PLC	± 0.15
4 PLC	± –
ANGLES	± 3°

MATERIAL: SEE NOTE
FINISH: SEE NOTE

DWN
CHK
APVD
PRODUCT SPEC
APPLICATION SPEC
WEIGHT 2.8 GRAMS

TE Connectivity

NAME: USB CONNECTOR, A SERIES, VERTICAL, DIP TYPE

SIZE	CAGE CODE	DRAWING NO	RESTRICTED TO
A3	00779	C-1734085	—

CUSTOMER DRAWING | SCALE — | SHEET 2 OF 9 | REV D

THIS DRAWING IS UNPUBLISHED. RELEASED FOR PUBLICATION AUG ,2006.
© COPYRIGHT 2009 BY TYCO ELECTRONICS CORPORATION. ALL RIGHTS RESERVED.

LOC	DIST
DW	—

REVISIONS

P	LTR	DESCRIPTION	DATE	DWN	APVD
		SEE SHEET 1.			

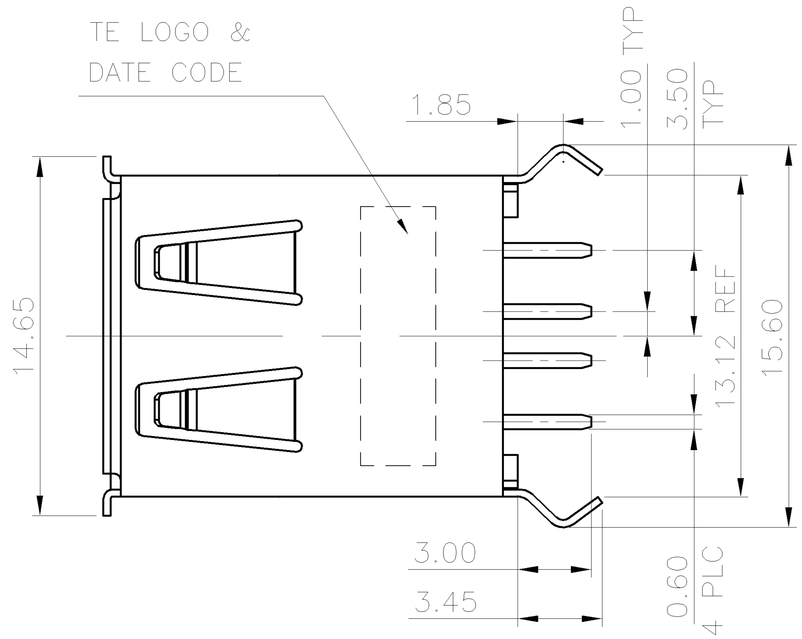

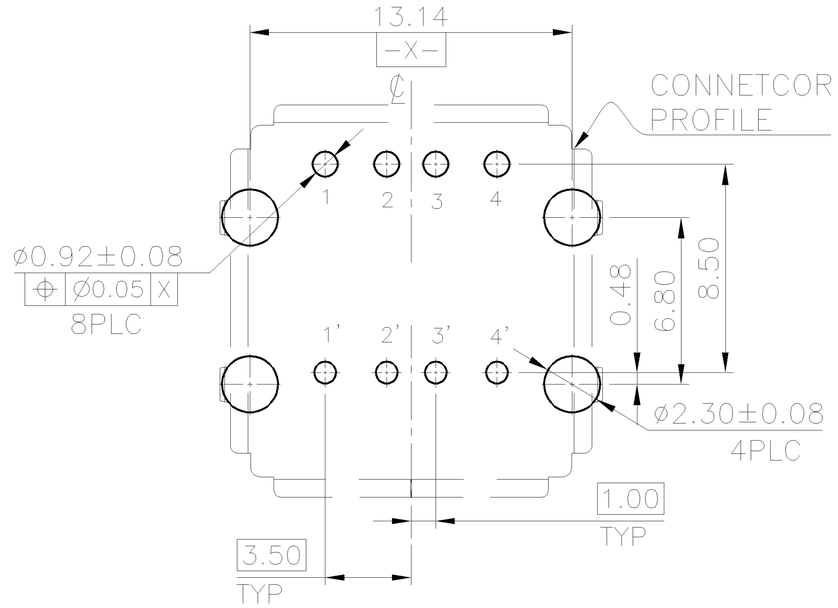

RECOMMEND P.C.B LAYOUT (THICKNESS 1.6mm)
(COMPONENT SIDE) TOLERANCE±0.05mm

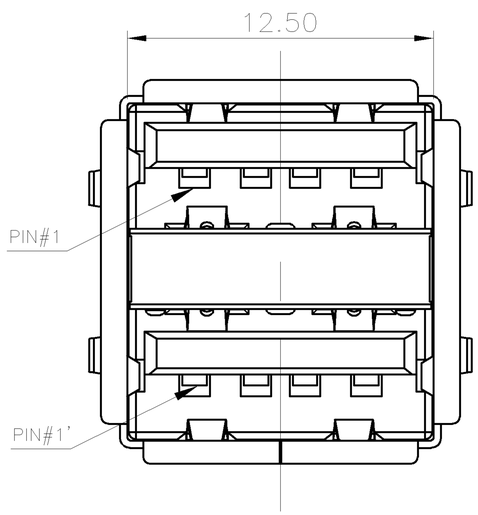

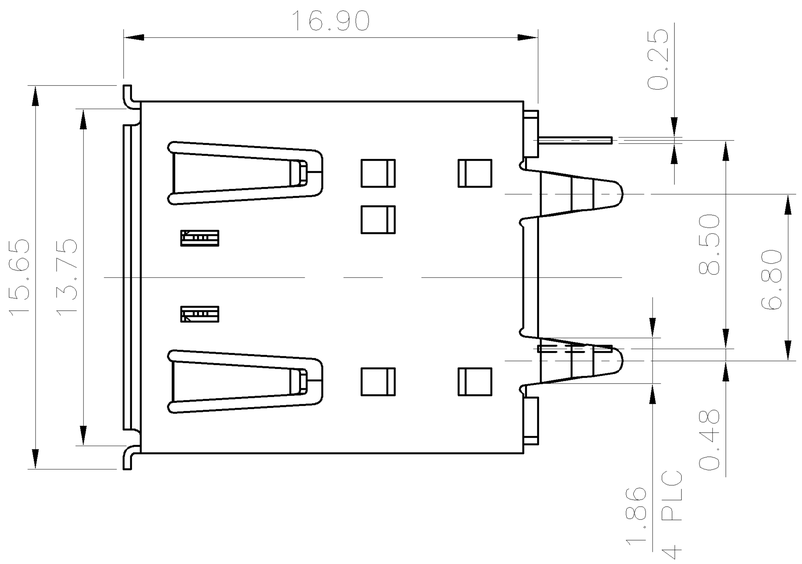

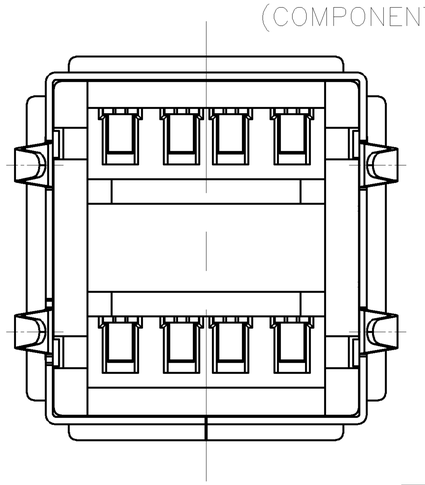

NOTES:
1. MATERIAL:
   HOUSING: THERMOPLASTIC (SEE TABLE), WITH 30% GF.
   UL 94V-0 RATED, BLACK COLOR
   CONTACT: BRASS.
   SHIELD: BRASS.
2. FINISH :
   CONTACT: 0.762μm [30μ"] MIN. GOLD PLATING ON CONTACT AREA.
   3.048μm [120μ"] MIN. BRIGHT TIN PLATING ON SOLDERTAILS
   WITH ENTIRE CONTACT UNDERPLATED 1.27μm [50μ"] MIN.
NICKEL
   SHIELD: 0.762μm [30μ"] MIN. NICKEL PLATING WITH
   0.762μm [30μ"] MIN Cu UNDERPLATING OVERALL
3. WAVE SOLDER CAPABLE TO 240°C PER TE TEST SPEC.
   109-202, CONDITION A.
4. REFLOW SOLDER CAPABLE TO 260°C PER TE TEST SPEC. 109-201,
   CONDITION B.
5. TID NUMBER IS 61000806 FOR USB 2.0 SPEC.

OBSOLETED	4 PA-9T	TRAY	2-1734085-2
	3 PBT	TRAY	2-1734085-1
	HSG. MATERIAL	PACKAGE	PART NUMBER

THIS DRAWING IS A CONTROLLED DOCUMENT.

DIMENSIONS: MM

TOLERANCES UNLESS OTHERWISE SPECIFIED:

0 PLC	± –
1 PLC	± 0.35
2 PLC	± 0.25
3 PLC	± 0.15
4 PLC	± –
ANGLES	± 3°

MATERIAL: SEE NOTE

FINISH: SEE NOTE

DWN
CHK
APVD
PRODUCT SPEC
APPLICATION SPEC
WEIGHT 4.57 GRAMS

TE Connectivity

NAME: USB CONNECTOR, A SERIES, VERTICAL, DIP TYPE

SIZE	CAGE CODE	DRAWING NO	RESTRICTED TO
A3	00779	C-1734085	—

CUSTOMER DRAWING | SCALE — | SHEET 3 OF 9 | REV D

THIS DRAWING IS UNPUBLISHED. RELEASED FOR PUBLICATION AUG ,2006.
© COPYRIGHT 2009 BY TYCO ELECTRONICS CORPORATION. ALL RIGHTS RESERVED.

LOC	DIST
DW	—

REVISIONS

P	LTR	DESCRIPTION	DATE	DWN	APVD
		SEE SHEET 1.			

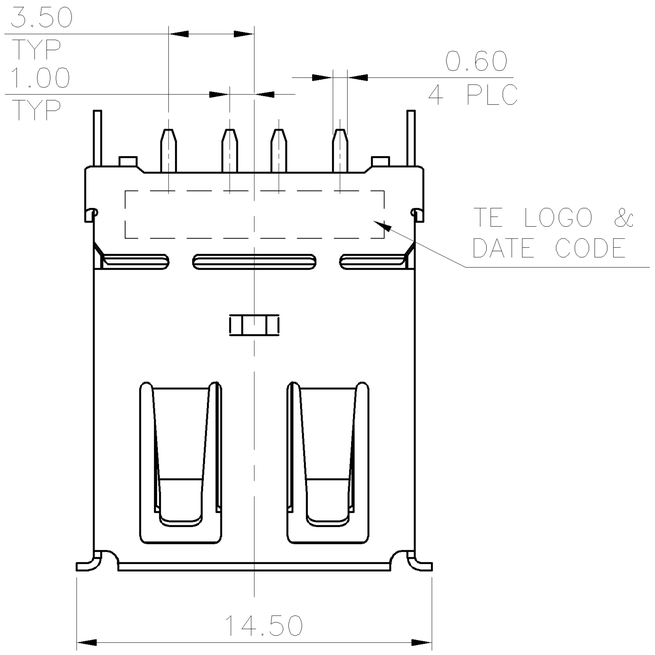

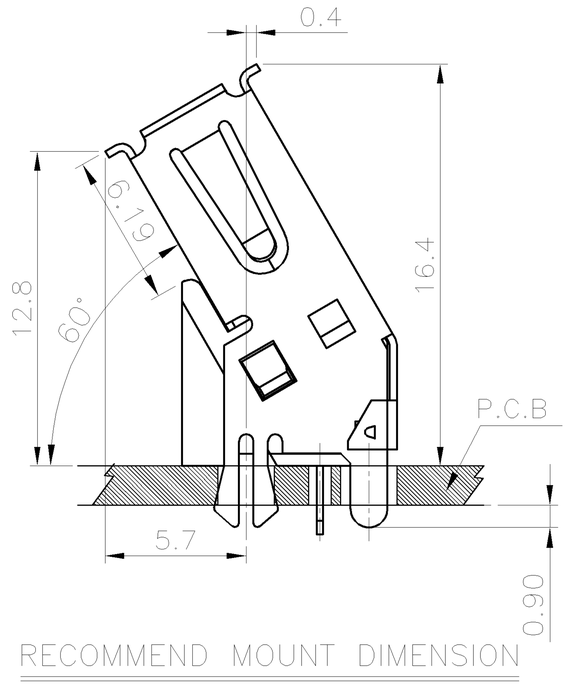

RECOMMEND MOUNT DIMENSION

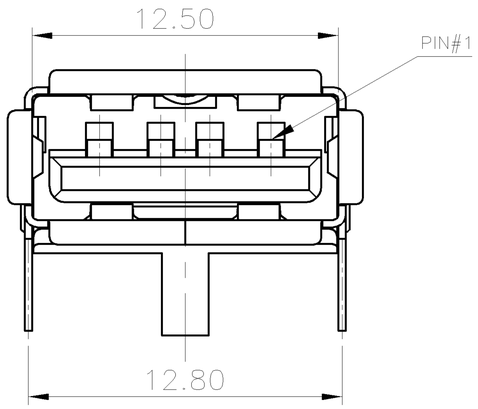

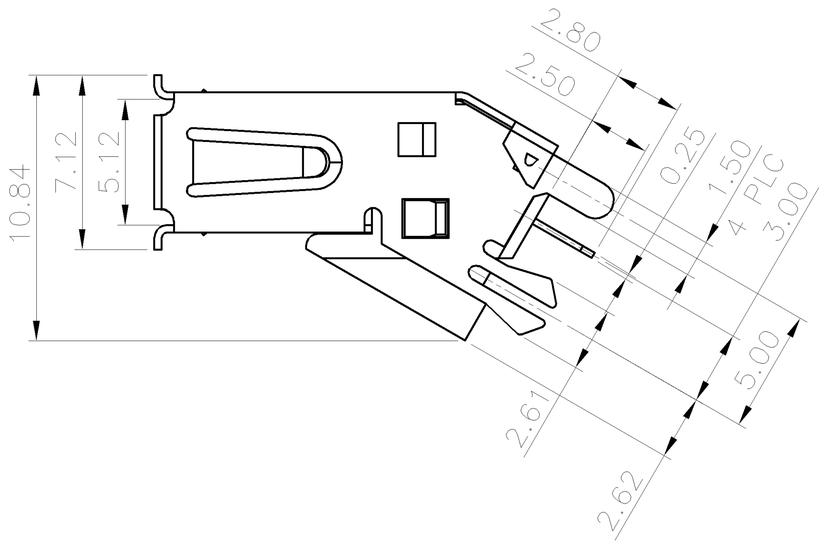

NOTES:
1. MATERIAL:
   HOUSING: THERMOPLASTIC (SEE TABLE), WITH 30% GF.
   UL 94V-0 RATED, BLACK COLOR
   CONTACT: PHOSPHOR BRONZE.
   SHIELD: BRASS.
2. FINISH:
   CONTACT: 0.762μm [30μ"] MIN. GOLD PLATING ON CONTACT AREA.
   3.048μm [120μ"] MIN. BRIGHT TIN PLATING ON SOLDERTAILS WITH ENTIRE CONTACT UNDERPLATED
   1.27μm [50μ"] MIN. NICKEL.
   SHIELD: 0.762μm [30μ"] MIN. NICKEL PLATING WITH
   0.762μm [30μ"] MIN. Cu UNDER PLATING OVERALL
3. WAVE SOLDER CAPABLE TO 240°C PER TE TEST SPEC. 109-202, CONDITION A.
4. REFLOW SOLDER CAPABLE TO 260°C PER TE TEST SPEC. 109-201, CONDITION B.
5. TID NUMBER IS 61000806 FOR USB 2.0 SPEC.

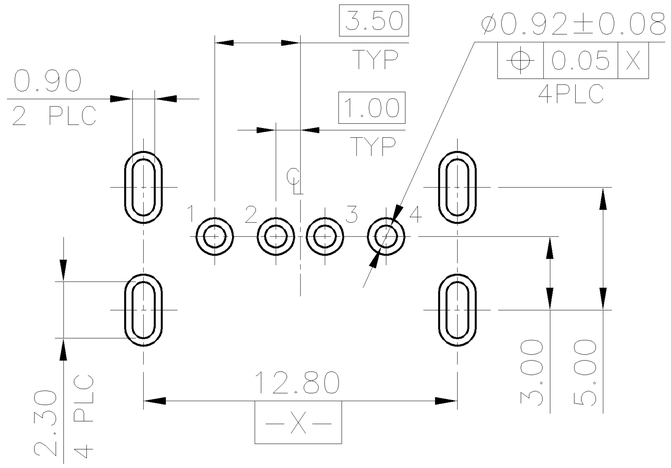

RECOMMEND P.C.B LAYOUT (THICKNESS 1.6mm)
(COMPONENT SIDE) TOLERANCE±0.05mm

	HSG. MATERIAL	PACKAGE	PART NUMBER
	4 PA-9T	TRAY	3-1734085-2
OBSOLETED	3 PBT	TRAY	3-1734085-1

THIS DRAWING IS A CONTROLLED DOCUMENT.

DIMENSIONS: MM

TOLERANCES UNLESS OTHERWISE SPECIFIED:

0 PLC	± –
1 PLC	± 0.35
2 PLC	± 0.25
3 PLC	± 0.15
4 PLC	± –
ANGLES	± 3°

MATERIAL: SEE NOTE
FINISH: SEE NOTE

DWN
CHK
APVD
PRODUCT SPEC
APPLICATION SPEC
WEIGHT 2.16 GRAMS
CUSTOMER DRAWING

TE Connectivity

NAME: USB CONNECTOR, A SERIES, VERTICAL, DIP TYPE

SIZE	CAGE CODE	DRAWING NO	RESTRICTED TO
A3	00779	C-1734085	—

SCALE —
SHEET 4 OF 9
REV D

THIS DRAWING IS UNPUBLISHED. RELEASED FOR PUBLICATION AUG ,2006.
© COPYRIGHT 2009 BY TYCO ELECTRONICS CORPORATION. ALL RIGHTS RESERVED.

LOC	DIST
DW	—

REVISIONS

P	LTR	DESCRIPTION	DATE	DWN	APVD
		SEE SHEET 1.			

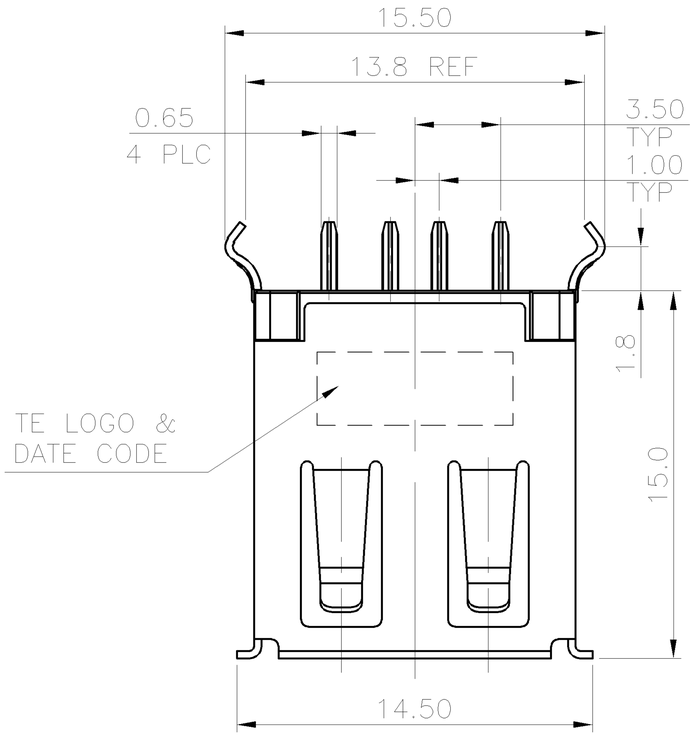

NOTES:
1. MATERIAL:
   HOUSING: THERMOPLASTIC (SEE TABLE), WITH 30% GF.
   UL 94V-0 RATED, BLACK: SEE TABLE.
   CONTACT: PHOSPHOR BRONZE.
   SHIELD: BRASS.
2. FINISH :
   CONTACT: 0.762μm [30μ"] MIN. GOLD PLATING ON CONTACT AREA.
   3.048μm [120μ"] MIN. BRIGHT TIN PLATING ON SOLDERTAILS
   WITH ENTIRE CONTACT UNDERPLATED 1.27μm [50μ"] MIN. NICKEL.
   SHIELD: 0.762μm [30μ"] MIN. NICKEL PLATING WITH
   0.762μm [30μ"] MIN. Cu UNDER PLATING OVERALL
3. WAVE SOLDER CAPABLE TO 240°C PER TE TEST SPEC. 109-202, CONDITION A.
4. REFLOW SOLDER CAPABLE TO 260°C PER TE TEST SPEC. 109-201, CONDITION B.
5. TID NUMBER IS 61000806 FOR USB 2.0 SPEC.

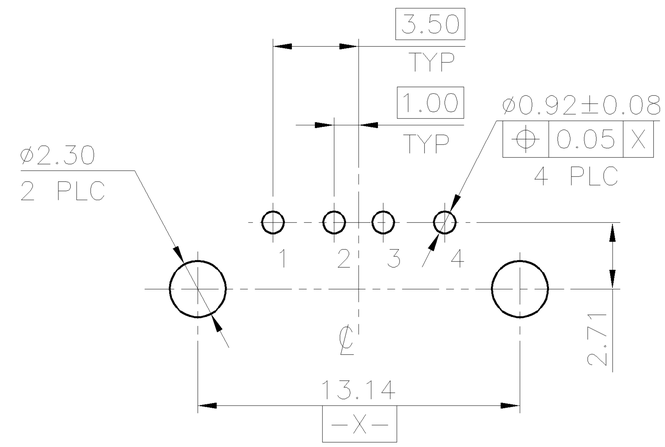

RECOMMEND P.C.B LAYOUT (THICKNESS 1.6mm)
(COMPONENT SIDE) TOLERANCE±0.05mm

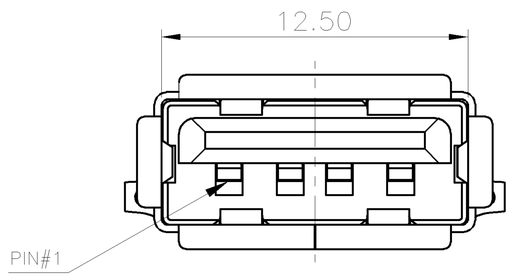

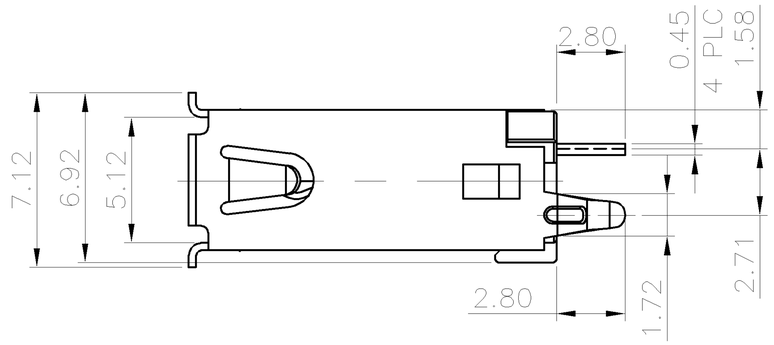

NATURE	PA-9T	TRAY	4-1734085-2
WHITE	PBT	TRAY	4-1734085-1
HSG. COLOR	HSG. MATERIAL	PACKAGE	PART NUMBER

THIS DRAWING IS A CONTROLLED DOCUMENT.

DIMENSIONS: MM

TOLERANCES UNLESS OTHERWISE SPECIFIED:

0 PLC	± –
1 PLC	± 0.35
2 PLC	± 0.25
3 PLC	± 0.15
4 PLC	± –
ANGLES	± 3°

MATERIAL: SEE NOTE

FINISH: SEE NOTE

DWN
CHK
APVD
PRODUCT SPEC
APPLICATION SPEC
WEIGHT 1.70 GRAMS

TE Connectivity

NAME: USB CONNECTOR, A SERIES, VERTICAL, DIP TYPE

SIZE	CAGE CODE	DRAWING NO	RESTRICTED TO
A3	00779	C-1734085	—

CUSTOMER DRAWING | SCALE — | SHEET 5 OF 9 | REV D

THIS DRAWING IS UNPUBLISHED. RELEASED FOR PUBLICATION AUG ,2006.
© COPYRIGHT 2009 BY TYCO ELECTRONICS CORPORATION. ALL RIGHTS RESERVED.

LOC	DIST
DW	—

REVISIONS

P	LTR	DESCRIPTION	DATE	DWN	APVD
		SEE SHEET 1.			

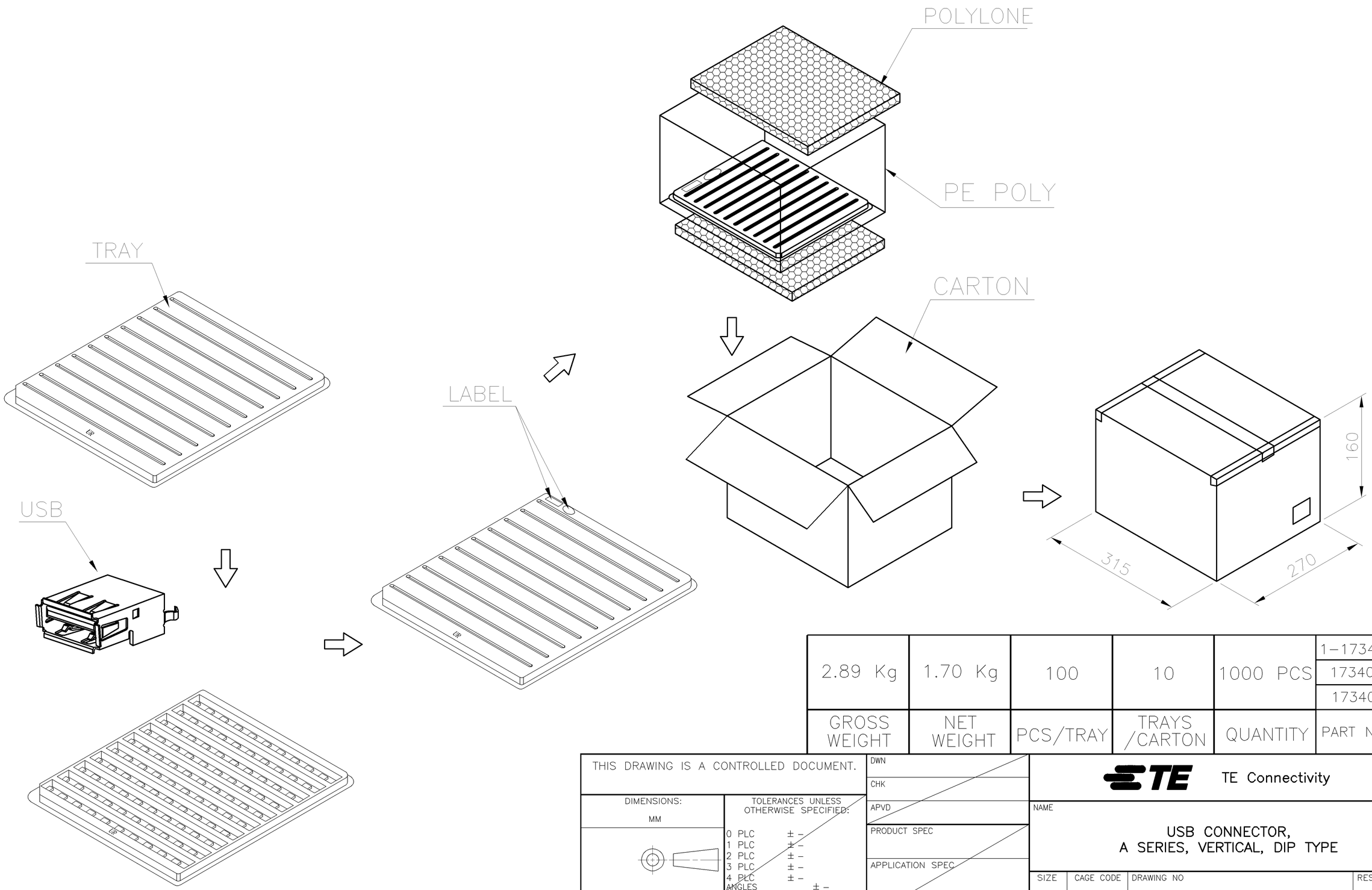

2.89 Kg	1.70 Kg	100	10	1000 PCS	1-1734085-X
					1734085-2
					1734085-1
GROSS WEIGHT	NET WEIGHT	PCS/TRAY	TRAYS /CARTON	QUANTITY	PART NUMBER

THIS DRAWING IS A CONTROLLED DOCUMENT.

DIMENSIONS: MM

TOLERANCES UNLESS OTHERWISE SPECIFIED:
0 PLC ± –
1 PLC ± –
2 PLC ± –
3 PLC ± –
4 PLC ± –
ANGLES ± –

MATERIAL –

FINISH –

DWN
CHK
APVD
PRODUCT SPEC
APPLICATION SPEC
WEIGHT –

TE Connectivity

NAME
USB CONNECTOR,
A SERIES, VERTICAL, DIP TYPE

SIZE	CAGE CODE	DRAWING NO	RESTRICTED TO
A3	00779	C-1734085	—

CUSTOMER DRAWING | SCALE — | SHEET 6 OF 9 | REV D

THIS DRAWING IS UNPUBLISHED. RELEASED FOR PUBLICATION AUG ,2006.
© COPYRIGHT 2009 BY TYCO ELECTRONICS CORPORATION. ALL RIGHTS RESERVED.

LOC	DIST
DW	—

REVISIONS

P	LTR	DESCRIPTION	DATE	DWN	APVD
		SEE SHEET 1.			

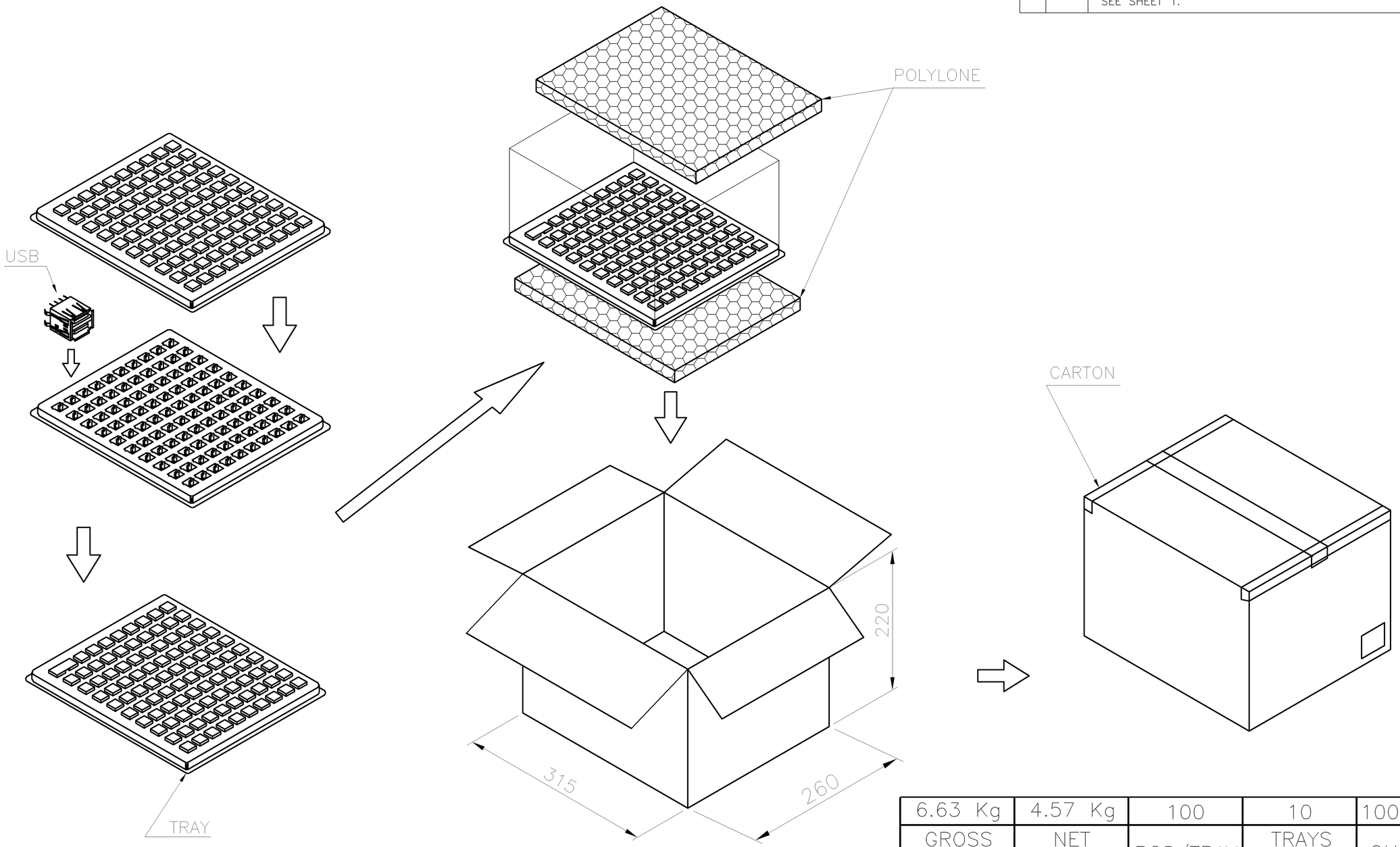

GROSS WEIGHT	NET WEIGHT	PCS/TRAY	TRAYS /CARTON	QUANTITY	PART NUMBER
6.63 Kg	4.57 Kg	100	10	1000 PCS	2-1734085-X

THIS DRAWING IS A CONTROLLED DOCUMENT.

DIMENSIONS: MM

TOLERANCES UNLESS OTHERWISE SPECIFIED:
0 PLC ± –
1 PLC ± –
2 PLC ± –
3 PLC ± –
4 PLC ± –
ANGLES ± –

MATERIAL –

FINISH –

DWN
CHK
APVD
PRODUCT SPEC
APPLICATION SPEC
WEIGHT –

TE Connectivity

NAME
USB CONNECTOR,
A SERIES, VERTICAL, DIP TYPE

SIZE	CAGE CODE	DRAWING NO	RESTRICTED TO
A3	00779	C-1734085	—

CUSTOMER DRAWING | SCALE — | SHEET 7 OF 9 | REV D

THIS DRAWING IS UNPUBLISHED. RELEASED FOR PUBLICATION AUG ,2006.
© COPYRIGHT 2009 BY TYCO ELECTRONICS CORPORATION. ALL RIGHTS RESERVED.

LOC	DIST
DW	—

REVISIONS

P	LTR	DESCRIPTION	DATE	DWN	APVD
		SEE SHEET 1.			

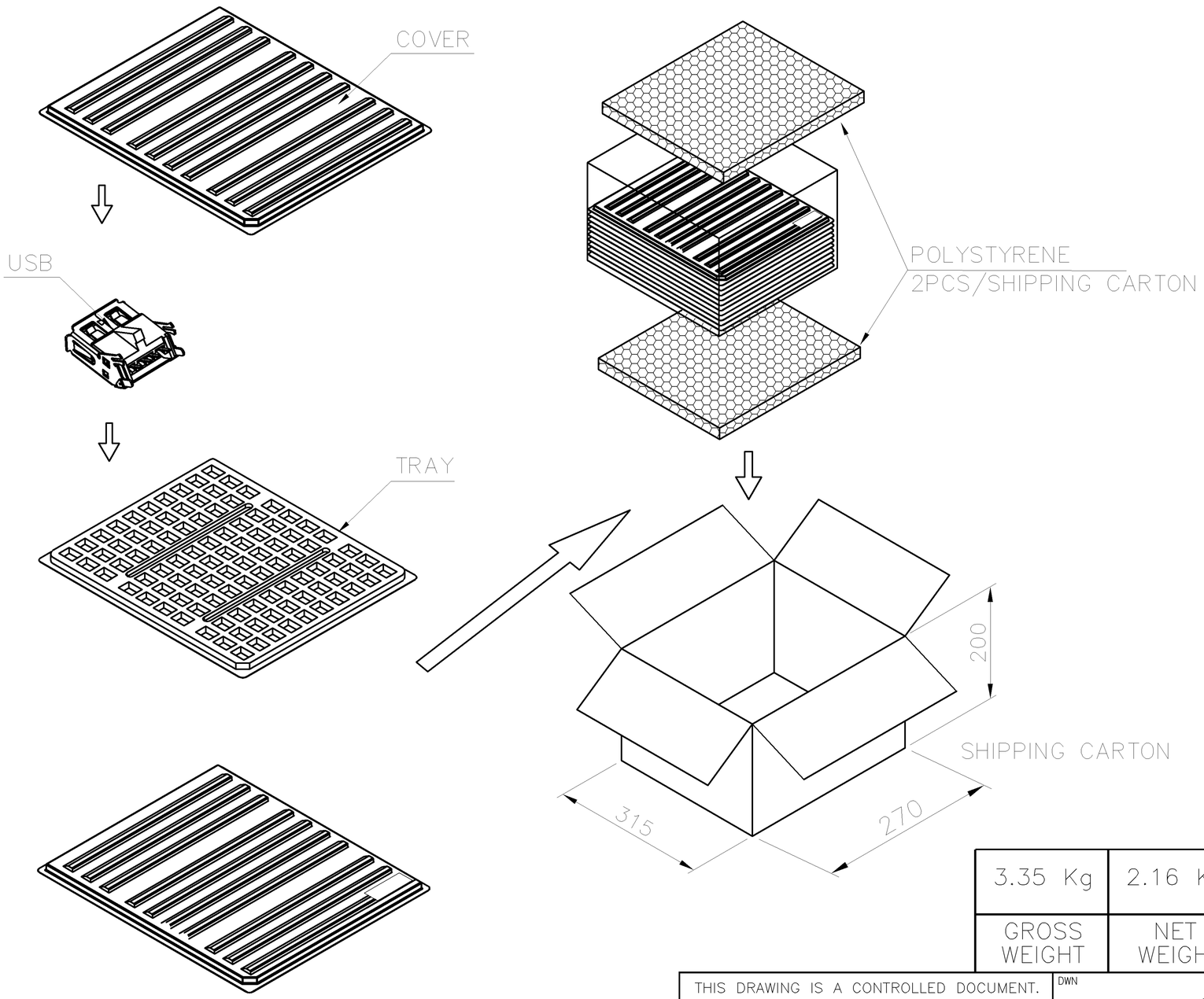

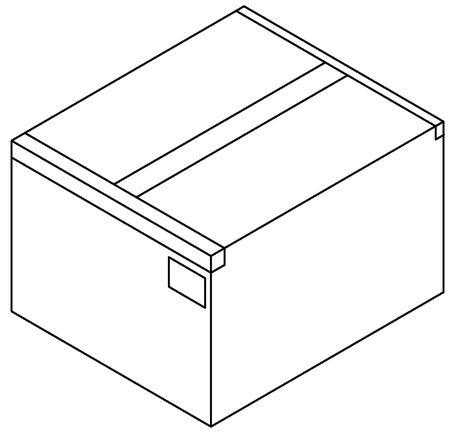

3.35 Kg	2.16 Kg	100	10	1000 PCS	4-1734085-X 3-1734085-X
GROSS WEIGHT	NET WEIGHT	PCS/TRAY	TRAYS /CARTON	QUANTITY	PART NUMBER

THIS DRAWING IS A CONTROLLED DOCUMENT.

DIMENSIONS: MM

TOLERANCES UNLESS OTHERWISE SPECIFIED:
0 PLC ± –
1 PLC ± –
2 PLC ± –
3 PLC ± –
4 PLC ± –
ANGLES ± –

MATERIAL –

FINISH –

DWN
CHK
APVD
PRODUCT SPEC
APPLICATION SPEC
WEIGHT –

TE Connectivity

NAME
USB CONNECTOR,
A SERIES, VERTICAL, DIP TYPE

SIZE	CAGE CODE	DRAWING NO	RESTRICTED TO
A3	00779	C-1734085	—

CUSTOMER DRAWING | SCALE — | SHEET 8 OF 9 | REV D

THIS DRAWING IS UNPUBLISHED. RELEASED FOR PUBLICATION AUG ,2006.
© COPYRIGHT 2009 BY TYCO ELECTRONICS CORPORATION. ALL RIGHTS RESERVED.

LOC	DIST
DW	—

REVISIONS

P	LTR	DESCRIPTION	DATE	DWN	APVD
		SEE SHEET 1.			

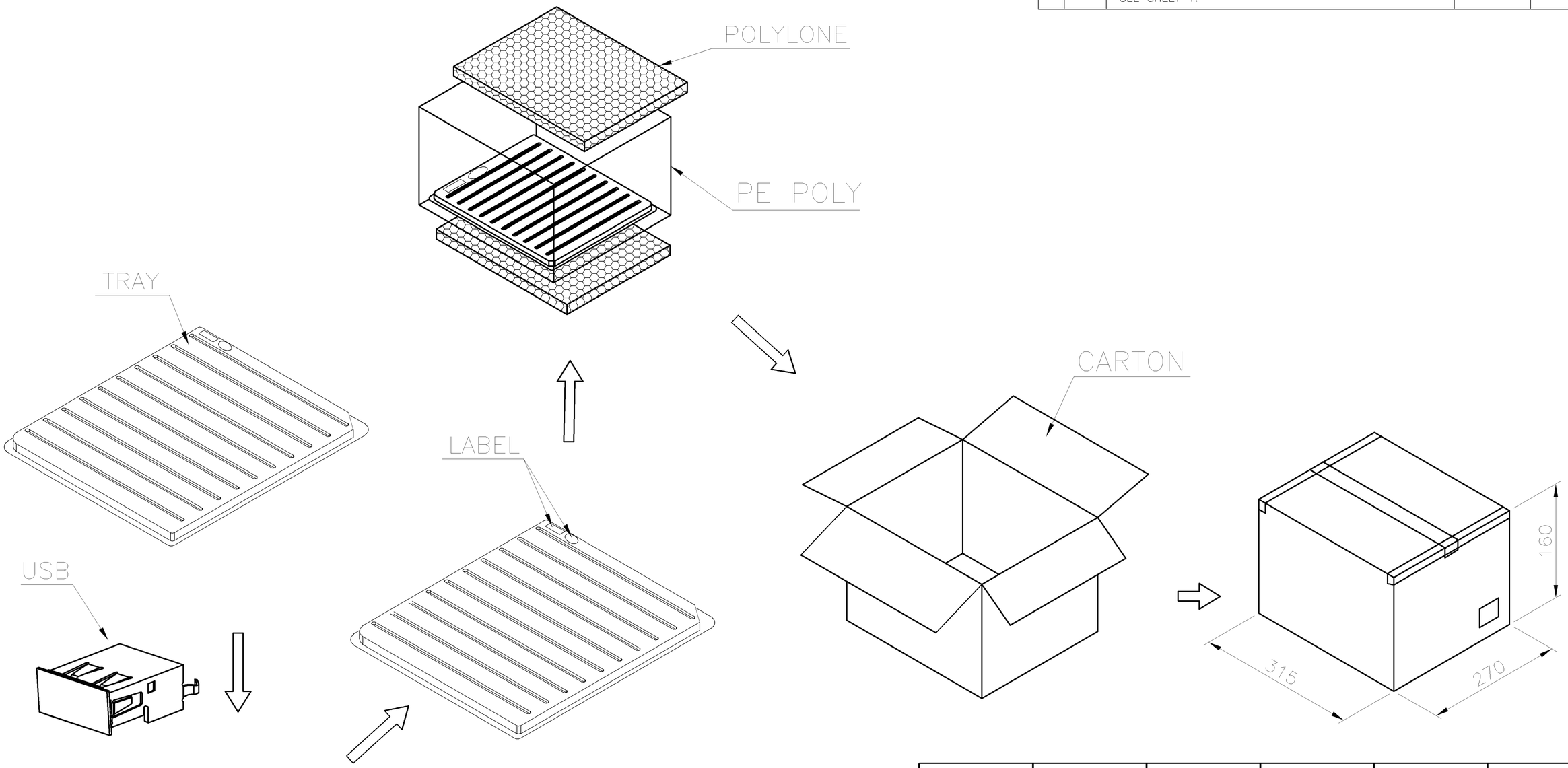

2.04 Kg	1.85 Kg	100	10	1000 PCS	1734085-3
GROSS WEIGHT	NET WEIGHT	PCS/TRAY	TRAYS /CARTON	QUANTITY	PART NUMBER

THIS DRAWING IS A CONTROLLED DOCUMENT.

DIMENSIONS: MM

TOLERANCES UNLESS OTHERWISE SPECIFIED:
0 PLC ± –
1 PLC ± –
2 PLC ± –
3 PLC ± –
4 PLC ± –
ANGLES ± –

MATERIAL –

FINISH –

DWN
CHK
APVD
PRODUCT SPEC
APPLICATION SPEC
WEIGHT –

TE Connectivity

NAME
USB CONNECTOR,
A SERIES, VERTICAL, DIP TYPE

SIZE	CAGE CODE	DRAWING NO	RESTRICTED TO
A3	00779	C-1734085	—

CUSTOMER DRAWING | SCALE — | SHEET 9 OF 9 | REV D