DWG. NO. SD-52968-001

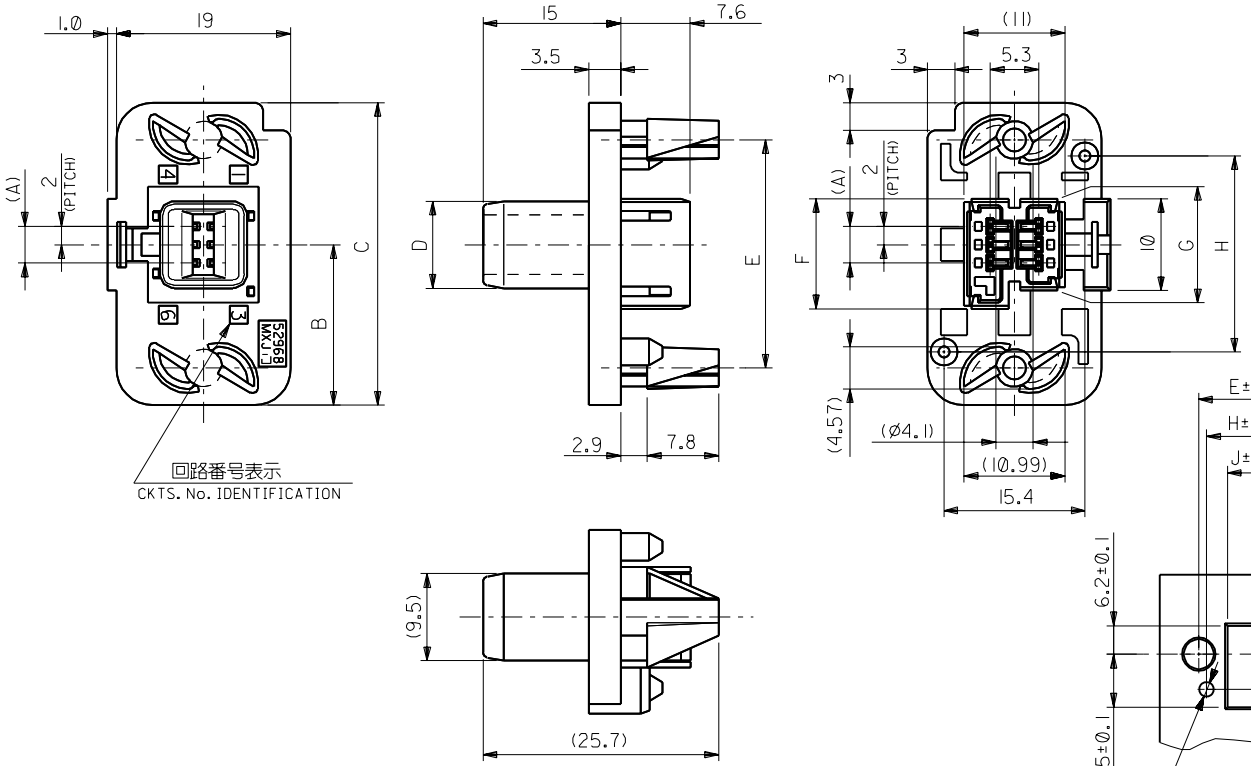

注)
NOTES;

1. 材質
MATERIAL
ハウシング：ポリカーボネート　UL94V-0　黒
HOUSING　：POLYCARBONATE, UL94V-0, BLACK
ターミナル：りん青銅
TERMINAL　：PHOSPHOR BRONZE

2. ターミナルメッキ仕様
TERMINAL PLATING
金メッキ　：0.25μmMIN.（接点部）
GOLD：0.25μm MIN.(CONTACT AREA)
錫メッキ　：2μm　MIN.（リセプタクル嵌合部）
TIN-LEAD：2μm MIN.(RECEPTACLE CONNECTED AREA)
ニッケルメッキ：2μm　MIN.（下地メッキ）
NICKEL：2μm MIN.(UNDER PLATING)

3. 適合リセプタクル：52484-**10,51090-**00
APPRICABLE RECEPTACLE：52484-**10,51090-**00

4. 嵌合相手：53717-**11
MATES WITH:53717-**11

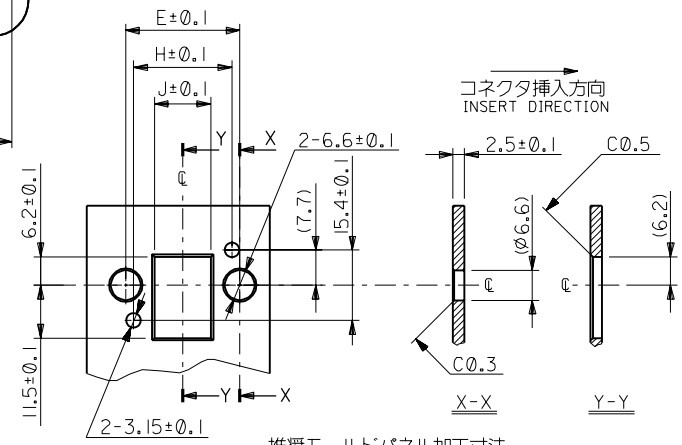

推奨モールドパネル加工寸法
PANEL CUT DIMENSIONS

12.3	21.4	10	12	24.9	9.5	33	17.5	4	52968-0611	52968-**11	6
J	H	G	F	E	D	C	B	(A)	MATERIAL NO.	MODEL NO.	CKT.

12.3	21.4	10	12	24.9	9.5	33	17.5	4	52968-0611	52968-**11	6
J	H	G	F	E	D	C	B	(A)	MATERIAL NO.	MODEL NO.	CKT.

DO NOT SCALE DRAWING

12.3NO. DRWN: CH'K: APPR:	12.3NO. DRWN: CH'K: APPR:	12.2NO. DRWN: CH'K: APPR:	12.1NO. DRWN: CH'K: APPR:	RELEASED '00/04/26	12.0NO. JD2000-1141 DRWN: J.MIYAZAWA CH'K: Y.ITO APPR: H.IKESUGI
				0	

DESCRIPTION / REV

MATERIAL 材料: SEE NOTE
FINISH 仕上げ: SEE NOTE
WIRE RANGE 適用電線範囲: —#—
INS. RANGE 被覆外径: —#—

GENERAL TOLERANCES: (UNLESS SPECIFIED) 一般公差

10 UNDER 未満	±0.2
10 OVER 以上 30 UNDER 未満	±0.25
30 OVER 以上	±0.3
ANGLE 角度	±3°

SCALE 2-1
DESIGN UNITS ☒mm ☐INCH
THIRD ANGLE PROJECTION
DIMENSIONS: ☐ mm/INCH ☐ INCH/mm ☒ mm ONLY
SHT REV
REVISE ON CAD ONLY

DRAWN BY & DATE J. Miyazawa '00/04/24
CHECKED BY & DATE Y. Ito '00/04/24
APPROVED BY & DATE H. Ikesugi '00/04/24
CAD FILENAME 52968001.S01

TITLE: 2mm PITCH FLOATING CONN. REC. HS'G ASS'Y

molex MOLEX INCORPORATED

MATERIAL NO. SEE CHART
DRAWING NO. SD-52968-001
SHEET NO. 1 OF 1

THIS DRAWING CONTAINS INFORMATION THAT IS PROPRIETARY TO MOLEX INCORPORATED AND SHOULD NOT BE USED WITHOUT WRITTEN PERMISSION.

SIZE B

52968001.S01

EN-02J(097) MXJ-54